REV	ENC NO.	MIDIFY CONTENT DESCRIPTION	DATE
A0	--	NEW DESIGE	2025.04.22
Unit	mm		

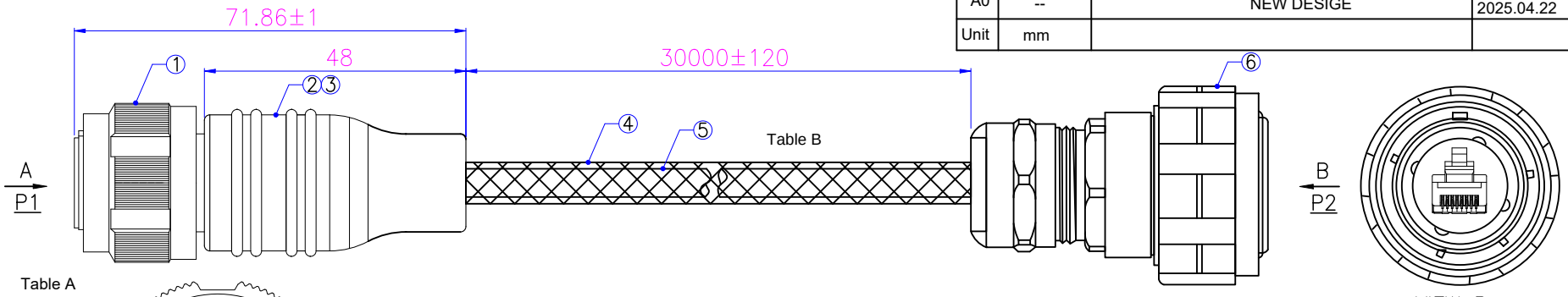

Table A

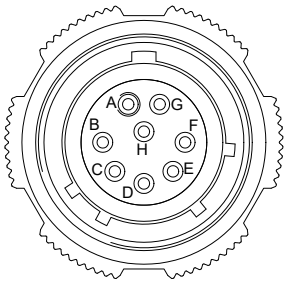

VIEW A

VIEW B

Table C

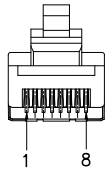

VIEW B

Table A

TECHNICAL REQUIREMENTS

Connector standard	MIL-DTL 38999, Series III
Shell style	Straight Plug
Material	Aluminum
Shell size	C
Number of Contacts	8
Finish	Olive Drab Cadmium
Contact type	Socket
Key/Keyway position	N
Lock type	Screw
Temperature	-65°C ÷ 175°C
Quality standards	IPC-A-620

ELECTRICAL CHARACTERISTICS

High voltage test	DC 300V / 0.01S
Insulation impedance	10MΩ MIN
Conductor impedance	3Ω MAX
Open short test	100% TEST

Wire Diagram

P1	Wire Color	P2	
A	Orange/White	1	Twisted pair
B	Orange	2	
C	Green/White	3	Twisted pair
D	Green	6	
E	Blue/White	5	Twisted pair
F	Blue	4	
G	Brown/White	7	Twisted pair
H	Brown	8	
shell	Shield Braid	shell	

No.	Specification	Unit	Q'ty
6	Customer supplied connector: 35660G	pc	1
5	Customer supplied cable CAT5E 4P*24AWG+B black TPE outer cover OD8.7(1P:blue& white blue;2P:Green&White Green;3P:Orange&White Orange;4P:Brown&White Brown)	pc	1
4	Weaving shielding net	pc	1
3	Overmoldin PVC black	pc	2
2	D3899926 welding wire type long shielding tube outlet: 10mm	pc	2
1	Connector: D38999/26WC8SN	pc	1

GENERAL TOLERANCE (UNLESS SPECIFIED)	DWN				
X. ±0.50 X.X ±0.30 X.XX ±0.20 X.XXX ±0.15 ANGEL ±3°		Viet Nam			
	APVD			TITLE	D38999/26WC8SN 35660G
THIRD ANGLE	UNIT	MM	REV A	PART NO	3CZ3808502-CCA1
	SIZE	A4	SHEET 1 OF 1	DRAWING NO	CCA1

VPM CHÍNH XÁC TRÁCH NHIỆM TIN CẬY

CUSTOMER NAME		CUSTOMER NO.		CUSTOMER CHK		SALES CHK	

NOTES: Please confirm and return the drawings within 2 working days. If the drawings are not returned after the expiration date, the default is that you have confirmed the qualified

RoHS

LIST NO.: QR-21-020 REV. A1

REV.	ENC NO.	MIDIFY CONTENT DESCRIPTION	DATE
A0	--	NEW DESIGE	2025.04.22

Cable

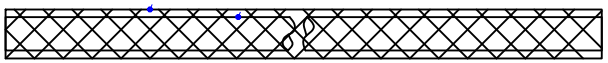

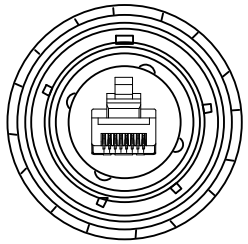

Table B

TECHNICAL REQUIREMENTS	
Gauge/c	24 AWG/4 pair
Approvals	VW-1, ISO/IEC 11801
Material	Copper Alloy
Shield	Tinned copper braiding, ≥80%
Foil Direction	Foil Facing Out
Material Jacket	TPE
Sunlight Resistance	Yes
Color	Black
Oil Resistance	Yes
Temperature	-40 to 80°C (static)
Voltage Rating	300Vrms

Table C

TECHNICAL REQUIREMENTS	
Connector standard	MIL-DTL 38999, Series III
Ratings	Cat5e
Number of contacts	8
Contact type	RJ45
Plating	Olive Drab Cadmium
IP rating	IP68
Connector type	Plug
Temperature	-40 to 85°C
Mounting Angle	Straight

MECHANICAL PERFORMANCE						
1	Cable load	180° /Force: 80N /1minute				No breaking circuit No short circuit
2	Bending test	Force	Angle	Direction (Left & Right)	Times/minute	No breaking circuit No short circuit
		10N	180	150 times	20	

CUSTOMER NAME		CUSTOMER NO.		CUSTOMER CHK		SALES CHK	

NOTES: Please confirm and return the drawings within 2 working days. If the drawings are not returned after the expiration date, the default is that you have confirmed the qualified

RoHS

GENERAL TOLERANCE (UNLESS SPECIFIED)	DWN				
X. ±0.50 X.X ±0.30 X.XX ±0.20 X.XXX ±0.15 ANGEL ±3°		Viet Nam			
	APVD			TITLE	D38999/26WC8SN 35660G
THIRD ANGLE	UNIT	MM	REV	A	PART NO	3CZ3808502-CCA1
	SIZE	A4	SHEET	1 OF 1	DRAWING NO	CCA1

VPM CHÍNH XÁC TRÁCH NHIỆM TIN CẬY

LIST NO.: QR-21-020 REV. A1